Stratus Hackpad (Page 1/2)

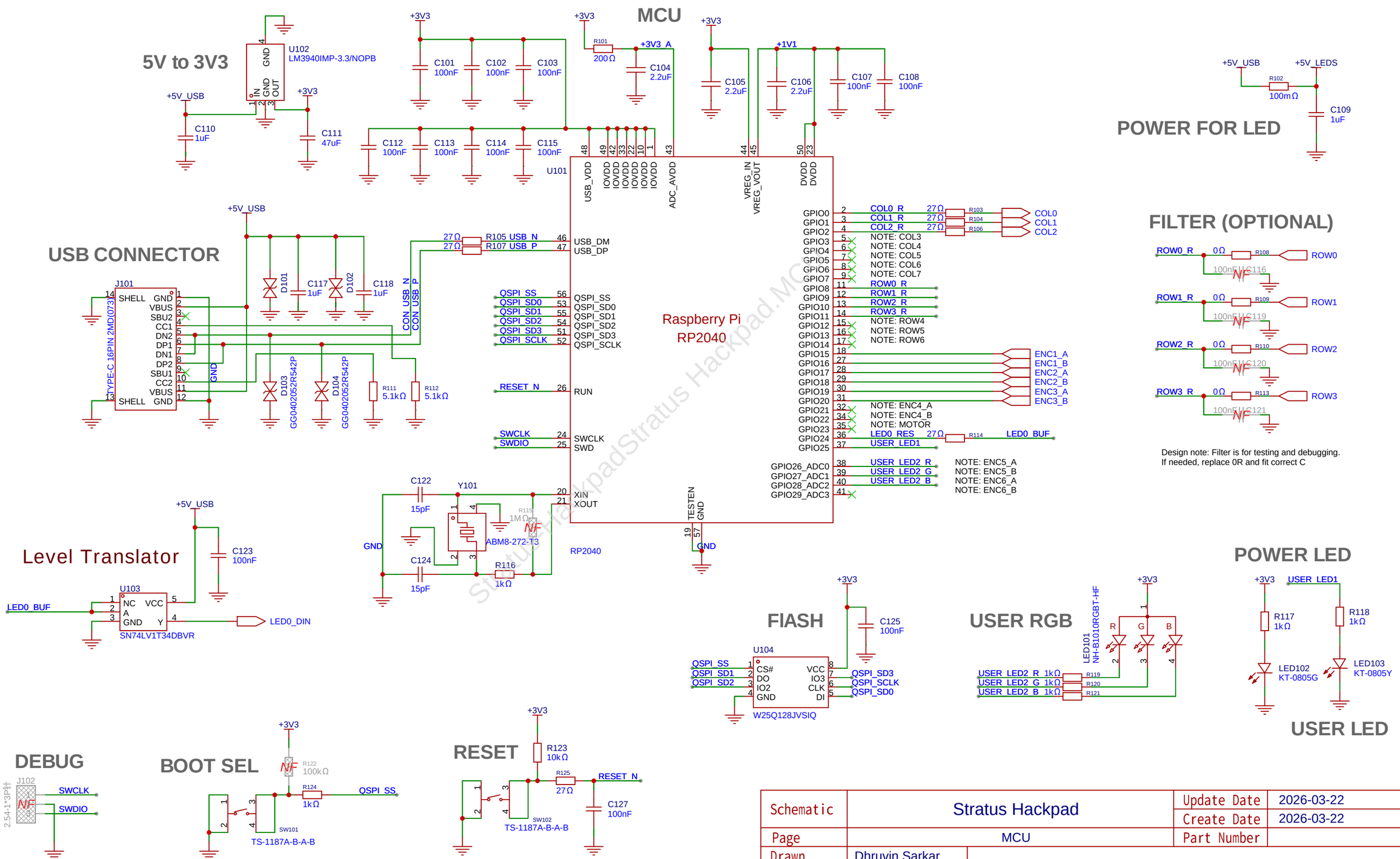

Schematic	Stratus Hackpad	Update Date	2026-03-22
		Create Date	2026-03-22
Page	MCU	Part Number	
Drawn	Dhruvin Sarkar	Stratus-Hackpad	
Reviewed	EasyEDA		
		VER	SIZE	PAGE 1 OF 2
EasyEDA		V1.0	A3	Dhruvin Sarkar

Stratus Hackpad (Page 2/2)

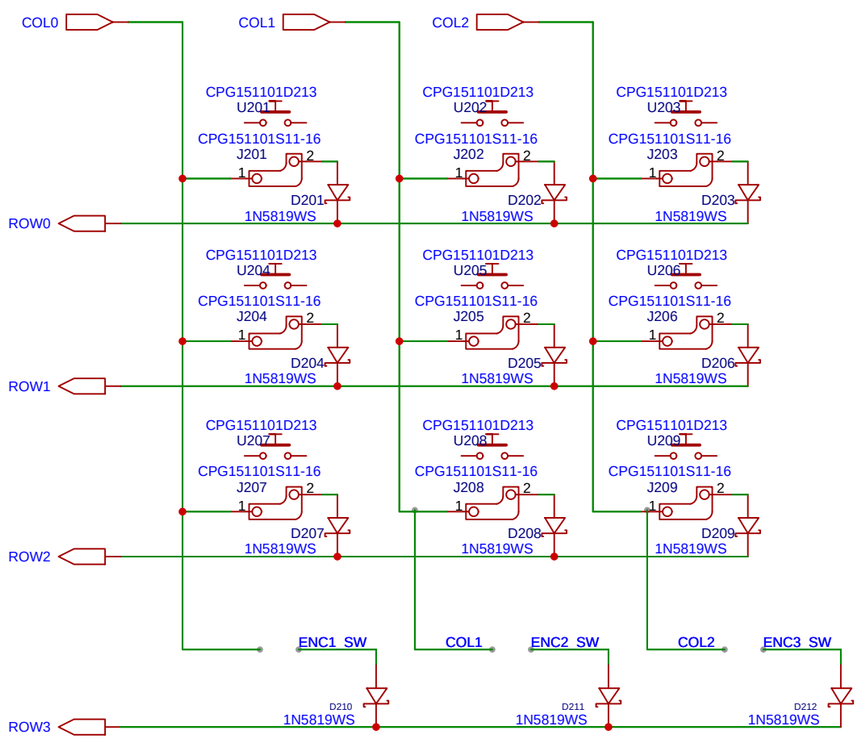

ENCODER1

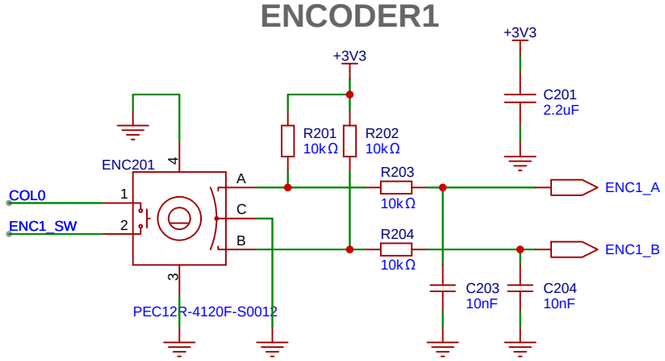

ENCODER2

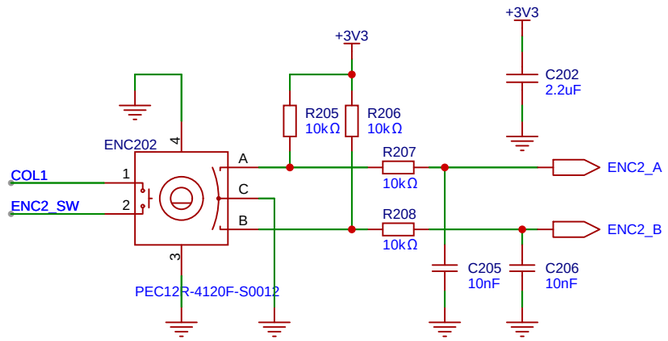

ENCODER3

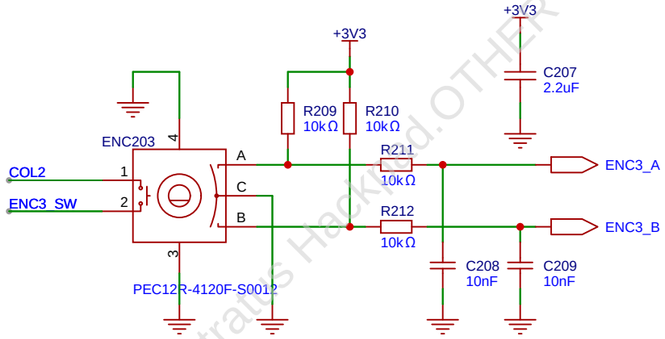

KEY LED

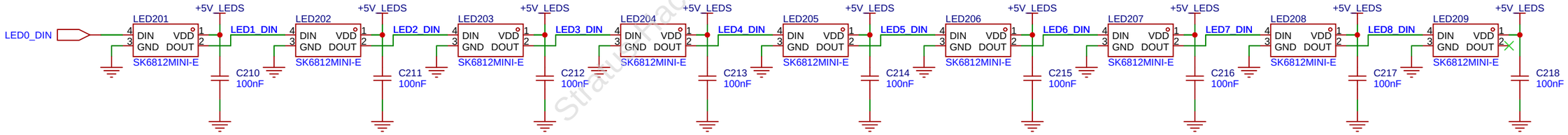

METAL PLATE MOUNTS

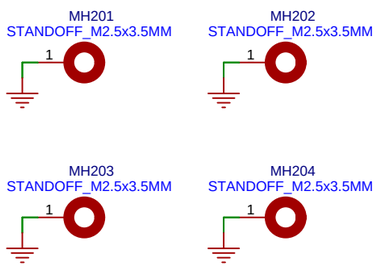

MOUNTING HOLES

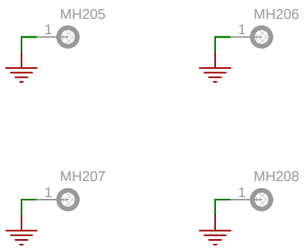

NOTES:
What else you need to build this keyboard

Buy:
- 9x Keycaps e.g. Mouser 474-PRT-15305
- 4x Feet, Farnell 2494552
- 2x M3x10 self-tapping screw
- 2x M3x12 self-tapping screw
- 4x M2.5x8 black machine screw
- Gorilla Super Glue Gel, Farnell 3532524

3D printed parts (color #1):
- 1x box bottom
- 1x box top
- 1x plate (CNC or 3D printed)
- 3x encoder knob

3D printed parts (color #2):
- 1x frame around buttons
- 3x frame around encoders
- 3x encoder knob top

3D transparent filament:
- 3x short pieces as a LED light guide

Optional:
- Use color 3D printing with custom picture
- Tools to remove caps and switches

Schematic	Stratus Hackpad	Update Date	2026-03-22
		Create Date	2026-03-22
Page	OTHER	Part Number	
Drawn	Dhruvin Sarkar	Stratus-Hackpad	
Reviewed	EasyEDA		
		VER	SIZE	PAGE 2 OF 2
EasyEDA		V1.0	A3	Dhruvin Sarkar

StratusHackpadStratus.OTHER